Work Order ID 58940

Thursday, May 20, 2010 10:29:59 AM

Item ID: D350-607-043 **Accept** **Setup Start**

Revision ID: **Stop**

Item Name: Heli-Utility-Basket

Start Date: 5/20/2010 **Start Qty:** 1.00 **Cust Item ID:**

Required Date: 6/4/2010 **Req'd Qty:** 1.00 **Customer:**

Reference:

Approvals: **Process Plan:** H **Date:** 10-5-20 **Tooling:** _____ **Date:** _____ **Run Start**

QC: _____ **Date:** _____ **SPC (Y/N):** _____ **Date:** _____ **Stop**

Sequence ID/ Work Center ID	Operation Description	Set Up/ Run Hours	Draw Number	Draw Rev.	Plan Code	Accept Qty	Reject Qty	Reject Number	Insp. Stamp
Draw Nbr	**Revision Nbr**								
D350-607-1	A								
100	DOCUMENT CONTROL B	0.00							
DC	**Memo**	0.00							
Document Control	Photocopy bluefile & type labels per PPPD350-607-043 CHG005								
110	Pick Kit	0.00							
Packaging	**Memo**	0.00							
Packaging									
120	Small Fab	0.00							
Small Fab	**Memo**	0.00							
Small Fab	Assemble as per Dwg D350-607 Seal Support Gusset with Sikaflex -291 Batch: M113519 Exp Date: ~~11-5~~ 9/12/23								

~~10/25/31~~ 6 for BG 10/05/28

6 10/06/01

10/05/31 6

10/05/31 6

Dart Aerospace Ltd

W/O:		WORK ORDER CHANGES					
DATE	STEP	PROCEDURE CHANGE	By	Date	Qty	Approval Chief Eng / Prod Mgr	Approval QC Inspector

Part No: _____ **PAR #:** _____ **Fault Category:** _____ **NCR:** Yes No **DQA:** _____ **Date:** _____

Resolution: _____ **Disposition:** _____ **QA: N/C Closed:** _____ **Date:** _____

NCR:		WORK ORDER NON-CONFORMANCE (NCR)						
DATE	STEP	Description of NC Section A	Corrective Action Section B			Verification Section C	Approval Chief Eng	Approval QC Inspector
			Initial Chief Eng	Action Description Chief Eng	Sign & Date			

NOTE: Date & initial all entries

H:\fFORMS\Quality Assurance\approved QA\NCRWO RevE

Work Order ID 58940

Thursday, May 20, 2010 10:29:59 AM

Item ID: D350-607-043 **Accept** **Setup Start**

Revision ID: **Stop**

Item Name: Heli-Utility-Basket

Start Date: 5/20/2010 **Start Qty:** 1.00 **Cust Item ID:**

Required Date: 6/4/2010 **Req'd Qty:** 1.00 **Customer:**

Reference:

Approvals: **Process Plan:** _____ **Date:** _____ **Tooling:** _____ **Date:** _____ **Run Start**

QC: _____ **Date:** _____ **SPC (Y/N):** _____ **Date:** _____ **Stop**

Sequence ID/ Work Center ID	Operation Description	Set Up/ Run Hours	Draw Number	Draw Rev.	Plan Code	Accept Qty	Reject Qty	Reject Number	Insp. Stamp
130	QC5- Inspect part completeness to step on W/O	0.00							
QC	Memo	0.00							
Quality Control									
140	Pick Kit	0.00							
Packaging	Memo	0.00							
Packaging									
150	QC4- 100% Inspect kits for completeness	0.00							
QC	Memo	0.00							
Quality Control									

Dart Aerospace Ltd

W/O:		WORK ORDER CHANGES					
DATE	STEP	PROCEDURE CHANGE	By	Date	Qty	Approval Chief Eng / Prod Mgr	Approval QC Inspector

Part No: _____ PAR #: _____ Fault Category: _____ NCR: Yes No DQA: _____ Date: _____

Resolution: _____ Disposition: _____ QA: N/C Closed: _____ Date: _____

NCR:		WORK ORDER NON-CONFORMANCE (NCR)						
DATE	STEP	Description of NC Section A	Corrective Action Section B			Verification Section C	Approval Chief Eng	Approval QC Inspector
			Initial Chief Eng	Action Description Chief Eng	Sign & Date			

NOTE: Date & initial all entries

H:\fFORMS\Quality Assurance\approved QA\NCRWO RevE

Work Order ID 58940

Thursday, May 20, 2010 10:29:59 AM

Item ID: D350-607-043 **Accept** **Setup Start**

Revision ID: **Stop**

Item Name: Heli-Utility-Basket

Start Date: 5/20/2010 **Start Qty:** 1.00 **Cust Item ID:**

Required Date: 6/4/2010 **Req'd Qty:** 1.00 **Customer:**

Reference:

Approvals: **Process Plan:** _____ **Date:** _____ **Tooling:** _____ **Date:** _____ **Run Start**

QC: _____ **Date:** _____ **SPC (Y/N):** _____ **Date:** _____ **Stop**

Sequence ID/ Work Center ID	Operation Description	Set Up/ Run Hours	Draw Number	Draw Rev.	Plan Code	Accept Qty	Reject Qty	Reject Number	Insp. Stamp
160		0.00							
Packaging	Packaging								
Packaging	**Memo**	0.00							
	Identify and pack for shipping as per PPP D350-607-043 Location: NAVG								
170	QC21- Final Inspection - Work Order Release	0.00							
QC	**Memo**	0.00							
Quality Control									

10/06/01

CL10/6/1

Dart Aerospace Ltd

W/O:		WORK ORDER CHANGES					
DATE	STEP	PROCEDURE CHANGE	By	Date	Qty	Approval Chief Eng / Prod Mgr	Approval QC Inspector

Part No: _____ **PAR #:** _____ **Fault Category:** _____ **NCR:** Yes No **DQA:** _____ **Date:** _____

Resolution: _____ **Disposition:** _____ **QA: N/C Closed:** _____ **Date:** _____

NCR:		WORK ORDER NON-CONFORMANCE (NCR)						
DATE	STEP	Description of NC Section A	Corrective Action Section B			Verification Section C	Approval Chief Eng	Approval QC Inspector
			Initial Chief Eng	Action Description Chief Eng	Sign & Date			

NOTE: Date & initial all entries

H:\fFORMS\Quality Assurance\approved QA\NCRWO RevE

Picklist Print

Thursday, May 20, 2010 10:30:04 AM

Work Order ID: 58940

Parent Item: D350-607-043

Parent Item Name: Heli-Utility-Basket

Comments: IPP Rev:E as Per DSI9318 06-01-24 JLM
IPP Rev:F ECN1068 07-12-21 DD verified by:ec IPP rev:G as per ecn10-545 DD 10.04.19 verified by:EC

Start Date: 5/20/2010 **Required Date:** 6/4/2010
Start Qty: 1.00 **Required Qty:** 1.00

Component Item ID/	Replacement	Mfg/	Bin	Primary	Last	Route	Unit of	Qty on	Qty per Kit	Qty	Date	Status
D2728-3		Manufactured	No			110	Each	0.0000	2			
Dart Logo label										SB	10/05/31	
~~D350-607-241~~ K607-043		Manufactured	No			140	Each	0.0000	1	B59146	10-6-1	
Basket Clamp Assembly CHG2005										~~SB~~ 10/05/31		
D2022-101		Manufactured	No			110	Each	237.0000	5			
Spacer										SB	10/05/31	

Location		Loc Qty	Loc Code	Qty	Date
ST504		237			
	45885	37		5	SB 10/05/31
	50746	100			
	52325	100			

D2221		Manufactured	No			110	Each	0.0000	1			
350 Basket Base							B58943 (1x)					
D2258-200		Manufactured	No			110	Each	6.0000	1		SB 10/05/31	
Placard 200lb												

Location		Loc Qty	Loc Code	Qty	Date
ST505		6			
	56229	6		1	

D2332-041		Manufactured	No			110	Each	14.0000	1			
Lid Prop Assembly 6.69" long												

Location		Loc Qty	Loc Code	Qty	Date
ST512		14			SB 10/05/31
	57344	4		1	
	57645	10			

Dart Aerospace Ltd

W/O:		WORK ORDER CHANGES					
DATE	STEP	PROCEDURE CHANGE	By	Date	Qty	Approval Chief Eng / Prod Mgr	Approval QC Inspector

Part No: _____ PAR #: _____ Fault Category: _____ NCR: Yes No DQA: _____ Date: _____

Resolution: _____ Disposition: _____ QA: N/C Closed: _____ Date: _____

NCR:		WORK ORDER NON-CONFORMANCE (NCR)						
DATE	STEP	Description of NC Section A	Corrective Action Section B			Verification Section C	Approval Chief Eng	Approval QC Inspector
			Initial Chief Eng	Action Description Chief Eng	Sign & Date			

NOTE: Date & initial all entries

H:\fFORMS\Quality Assurance\approved QA\NCRWO RevE

Picklist Print

Thursday, May 20, 2010 10:30:04 AM

Work Order ID: 58940

Parent Item: D350-607-043

Parent Item Name: Heli-Utility-Basket

Comments: IPP Rev:E as Per DSI9318 06-01-24 JLM
IPP Rev:F ECN1068 07-12-21 DD verified by:ec IPP rev:G as per ecn10-545 DD 10.04.19 verified by:EC

Start Date: 5/20/2010 **Required Date:** 6/4/2010
Start Qty: 1.00 **Required Qty:** 1.00

Component Item ID/	Replacement	Mfg/	Bin	Primary	Last	Route	Unit of	Qty on	Qty per Kit	Qty	Date	Status
D2530		Manufactured	No			110	Each	9.0000	1			
Handle Weldment												
				Location		**Loc Qty**		**Loc Code**				
				ST506		9						
					57736	1						
					57964	2						
					58428	6				1	SB 10/05/31	
D2535		Manufactured	No			110	Each	142.0000	2			
Spring												
				Location		**Loc Qty**		**Loc Code**				
				ST504		142						
					56355	42				2	SB 15/05/31	
					58331	100						
D2537		Manufactured	No			110	Each	57.0000	2			
Bushing												
				Location		**Loc Qty**		**Loc Code**				
				ST504		57						
					57722	17				2	SB 10/05/31	
					58429	40						
D2931		Manufactured	No			110	Each	862.0000	2			
Bumper												
				Location		**Loc Qty**		**Loc Code**				
				ST504		862						
					46064	862				2	SB 10/05/31	

Dart Aerospace Ltd

W/O:		WORK ORDER CHANGES					
DATE	STEP	PROCEDURE CHANGE	By	Date	Qty	Approval Chief Eng / Prod Mgr	Approval QC Inspector

Part No: _____ **PAR #:** _____ **Fault Category:** _____ **NCR:** Yes No **DQA:** _____ **Date:** _____

Resolution: _____ **Disposition:** _____ **QA: N/C Closed:** _____ **Date:** _____

NCR:		WORK ORDER NON-CONFORMANCE (NCR)						
DATE	STEP	Description of NC Section A	Corrective Action Section B			Verification Section C	Approval Chief Eng	Approval QC Inspector
			Initial Chief Eng	Action Description Chief Eng	Sign & Date			

NOTE: Date & initial all entries

H:\fFORMS\Quality Assurance\approved QA\NCRWO RevE

Picklist Print

Thursday, May 20, 2010 10:30:04 AM

Work Order ID: 58940

Parent Item: D350-607-043

Parent Item Name: Heli-Utility-Basket

Comments: IPP Rev:E as Per DSI9318 06-01-24 JLM
IPP Rev:F ECN1068 07-12-21 DD verified by:ec IPP rev:G as per ecn10-545 DD 10.04.19 verified by:EC

Start Date: 5/20/2010 **Required Date:** 6/4/2010
Start Qty: 1.00 **Required Qty:** 1.00

Component Item ID/	Replacement	Mfg/	Bin	Primary	Last	Route	Unit of	Qty on	Qty per Kit	Qty	Date	Status
D2989-041		Manufactured	No			110	Each	0.0000	1			
Basket Lid Assembly						B58947 (IX)					10/05/31	
D2989-043		Manufactured	No			110	Each	0.0000	1			
Basket Lid Assembly						B5895 (IX)					10/05/31	
AN3-16A		Purchased	No			110	Each	65.0000	2			
Bolt											10/05/31	
				Location		**Loc Qty**		**Loc Code**				
				ST352		65						
					113845	45				2	10/05/31	
					114523	20						
AN4-13A		Purchased	No			110	Each	119.0000	2			
Bolt												
				Location		**Loc Qty**		**Loc Code**				
				ST351		119						
					114523	119				2	10/05/31	
AN4-22A		Purchased	No			110	Each	228.0000	7			
Bolt												
				Location		**Loc Qty**		**Loc Code**				
				ST359		228						
					111965	128				7	10/05/31	
					114523	100						

Dart Aerospace Ltd

W/O:		WORK ORDER CHANGES					
DATE	STEP	PROCEDURE CHANGE	By	Date	Qty	Approval Chief Eng / Prod Mgr	Approval QC Inspector

Part No: _____ **PAR #:** _____ **Fault Category:** _____ **NCR:** Yes No **DQA:** _____ **Date:** _____

Resolution: _____ **Disposition:** _____ **QA: N/C Closed:** _____ **Date:** _____

NCR:		WORK ORDER NON-CONFORMANCE (NCR)						
DATE	STEP	Description of NC Section A	Corrective Action Section B			Verification Section C	Approval Chief Eng	Approval QC Inspector
			Initial Chief Eng	Action Description Chief Eng	Sign & Date			

NOTE: Date & initial all entries

H:\fFORMS\Quality Assurance\approved QA\NCRWO RevE

Picklist Print

Thursday, May 20, 2010 10:30:05 AM

Work Order ID: 58940

Parent Item: D350-607-043

Parent Item Name: Heli-Utility-Basket

Comments: IPP Rev:E as Per DSI9318 06-01-24 JLM
IPP Rev:F ECN1068 07-12-21 DD verified by:ec IPP rev:G as per ecn10-545 DD 10.04.19 verified by:EC

Start Date: 5/20/2010 **Required Date:** 6/4/2010
Start Qty: 1.00 **Required Qty:** 1.00

Component Item ID/	Replacement	Mfg/	Bin	Primary	Last	Route	Unit of	Qty on	Qty per Kit	Qty	Date	Status
AN5-17A		Purchased	No			110	Each	151.0000	4			
Bolt												
				Location		**Loc Qty**		**Loc Code**				
				ST323		46						
					114324	46				4	SB 10/05/31	
				ST339		105						
					113538	5						
					114330	100						
MS20600-AD4W3		Purchased	No			110	Each	1,789.000	2			
Cherry Rivets												
				Location		**Loc Qty**		**Loc Code**				
				ST321		1789						
					106375	3					SB 10/05/31	
					107939	822						
					111636	964				2		
* AN960JD416 QSI017 NAS1149D0463J M114576 (14x)		Purchased	No			110	Each	0.0000	14		SB 10/05/31	
Washer												
* AN960JD416L		Purchased	No			110	Each	413.0000	2		SB 10/05/31	
Washer QSI017 NAS1149D0416J M13910 (2x)												
				Location		**Loc Qty**		**Loc Code**				
				ST346		413						
					110153	413					SB 10/05/31	
* AN960JD516		Purchased	No			110	Each	0.0000	4			
Washer QSI017 NAS1149D0563J M113706 (4x)												

Dart Aerospace Ltd

W/O:		WORK ORDER CHANGES					
DATE	STEP	PROCEDURE CHANGE	By	Date	Qty	Approval Chief Eng / Prod Mgr	Approval QC Inspector

Part No: _____ **PAR #:** _____ **Fault Category:** _____ **NCR:** Yes No **DQA:** _____ **Date:** _____

Resolution: _____ **Disposition:** _____ **QA: N/C Closed:** _____ **Date:** _____

NCR:		WORK ORDER NON-CONFORMANCE (NCR)						
DATE	STEP	Description of NC Section A	Corrective Action Section B			Verification Section C	Approval Chief Eng	Approval QC Inspector
			Initial Chief Eng	Action Description Chief Eng	Sign & Date			

NOTE: Date & initial all entries

H:\fFORMS\Quality Assurance\approved QA\NCRWO RevE

Picklist Print

Thursday, May 20, 2010 10:30:05 AM

Work Order ID: 58940

Parent Item: D350-607-043

Parent Item Name: Heli-Utility-Basket

Comments: IPP Rev:E as Per DSI9318 06-01-24 JLM
IPP Rev:F ECN1068 07-12-21 DD verified by:ec IPP rev:G as per ecn10-545 DD 10.04.19 verified by:EC

Start Date: 5/20/2010 **Required Date:** 6/4/2010
Start Qty: 1.00 **Required Qty:** 1.00

Component Item ID/	Replacement	Mfg/	Bin	Primary	Last	Route	Unit of	Qty on	Qty per Kit	Qty	Date	Status
AN960JD8		Purchased	No			110	Each	0.0000	2			
Washer QJ7017 NAS1149DN832J M114740 (24)											SD 10/05/31	
NAS1515H4		Purchased	No			110	Each	151.0000	2			
Washer											SD 10/05/31	
				Location		**Loc Qty**		**Loc Code**				
				ST277		151						
					111294	53				2		
					111525	98						
AN970-4		Purchased	No			110	Each	121.0000	4			
Washer												
				Location		**Loc Qty**		**Loc Code**				
				ST349		121						
					112991	121				4	SD 10/05/31	
MS21042L3		Purchased	No			110	Each	1,862.000	2			
Nut												
				Location		**Loc Qty**		**Loc Code**				
				ST300		1862						
					113537	20						
					113644	342				2	SD 10/05/31	
					114523	1000						
					114718	500						

Dart Aerospace Ltd

W/O:		WORK ORDER CHANGES					
DATE	STEP	PROCEDURE CHANGE	By	Date	Qty	Approval Chief Eng / Prod Mgr	Approval QC Inspector

Part No: _____ **PAR #:** _____ **Fault Category:** _____ **NCR:** Yes No **DQA:** _____ **Date:** _____

Resolution: _____ **Disposition:** _____ **QA: N/C Closed:** _____ **Date:** _____

NCR:		WORK ORDER NON-CONFORMANCE (NCR)						
DATE	STEP	Description of NC Section A	Corrective Action Section B			Verification Section C	Approval Chief Eng	Approval QC Inspector
			Initial Chief Eng	Action Description Chief Eng	Sign & Date			

NOTE: Date & initial all entries

H:\fFORMS\Quality Assurance\approved QA\NCRWO RevE

Picklist Print

Thursday, May 20, 2010 10:30:05 AM

Work Order ID: 58940

Parent Item: D350-607-043

Parent Item Name: Heli-Utility-Basket

Start Date: 5/20/2010 **Required Date:** 6/4/2010

Start Qty: 1.00 **Required Qty:** 1.00

Comments: IPP Rev:E as Per DSI9318 06-01-24 JLM
IPP Rev:F ECN1068 07-12-21 DD verified by:ec IPP rev:G as per ecn10-545 DD 10.04.19 verified by:EC

Component Item ID/	Replacement	Mfg/	Bin	Primary	Last	Route	Unit of	Qty on	Qty per Kit	Qty	Date	Status
MS21042L4		Purchased	No			110	Each	2,705.000	9			
Nut												

Location		Loc Qty	Loc Code			
ST139		2				
	111827	2				
ST300		2703				
	113422	80				
	114523	1615		9	SB	10/05/31
	114718	1000				
	9063	8				

MS21042L5		Purchased	No			110	Each	532.0000	4			
Nut												

Location		Loc Qty	Loc Code			
ST300		532				
	113523	26				
	113537	3				
	114108	3				
	114437	100		4	SB	10/05/31
	114449	400				

Dart Aerospace Ltd

W/O:		WORK ORDER CHANGES					
DATE	STEP	PROCEDURE CHANGE	By	Date	Qty	Approval Chief Eng / Prod Mgr	Approval QC Inspector

Part No: _____ PAR #: _____ Fault Category: _____ NCR: Yes No DQA: _____ Date: _____

Resolution: _____ Disposition: _____ QA: N/C Closed: _____ Date: _____

NCR:		WORK ORDER NON-CONFORMANCE (NCR)						
DATE	STEP	Description of NC Section A	Corrective Action Section B			Verification Section C	Approval Chief Eng	Approval QC Inspector
			Initial Chief Eng	Action Description Chief Eng	Sign & Date			

NOTE: Date & initial all entries

H:\fFORMS\Quality Assurance\approved QA\NCRWO RevE

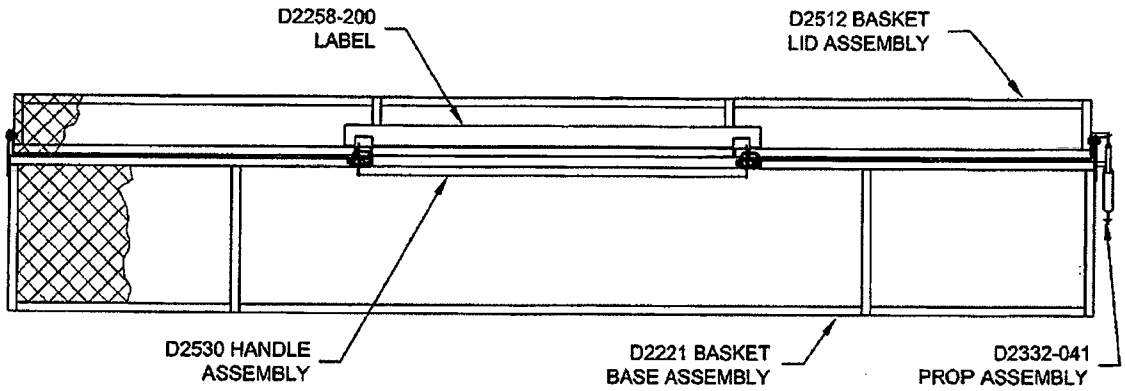

D350-607-041 HELI-UTILITY- BASKET ™

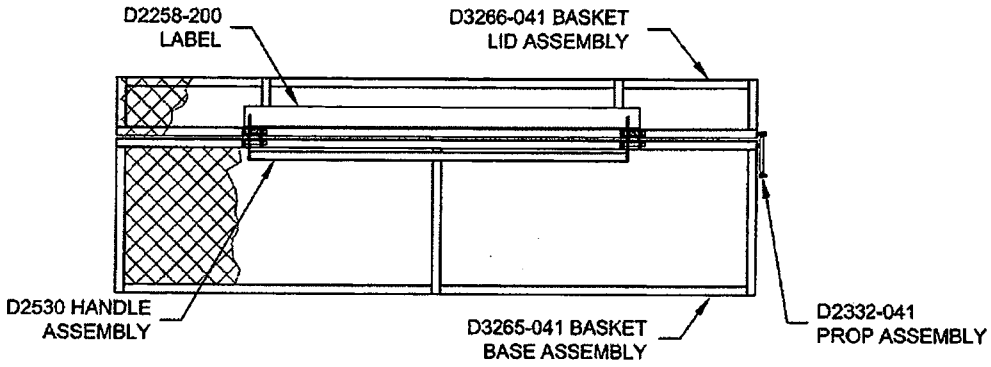

D350-607-045 HELI-UTILITY- BASKET ™

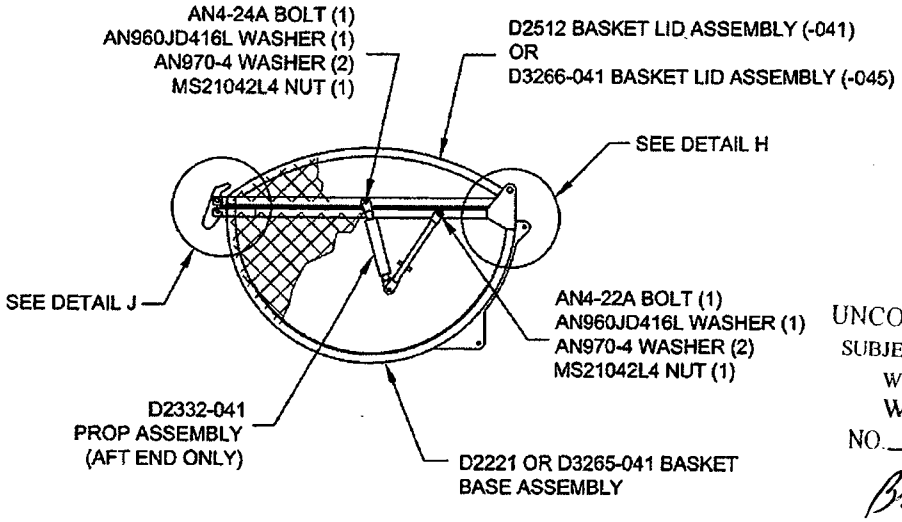

SHOP COPY
RETURN TO
ENGINEERING
UNCONTROLLED COPY
SUBJECT TO AMENDMENT
WITHOUT NOTICE
WORK ORDER
NO. 58940
BS 10-5-20

VIEW C-C
PROP ARM DETAIL

Figure 5 – Basket Replacement Parts

• COPYRIGHT © 1994 BY DART AEROSPACE LTD •
THIS DOCUMENT IS PRIVATE AND CONFIDENTIAL AND IS SUPPLIED ON THE EXPRESS CONDITION THAT IT IS NOT TO BE USED FOR ANY PURPOSE OR COPIED OR COMMUNICATED TO ANY OTHER PERSON WITHOUT WRITTEN PERMISSION FROM DART AEROSPACE LTD.

Dart Aerospace Ltd

W/O:		WORK ORDER CHANGES					
DATE	STEP	PROCEDURE CHANGE	By	Date	Qty	Approval Chief Eng / Prod Mgr	Approval QC Inspector

Part No: _____ PAR #: _____ Fault Category: _____ NCR: Yes No DQA: _____ Date: _____

Resolution: _____ Disposition: _____ QA: N/C Closed: _____ Date: _____

NCR:		WORK ORDER NON-CONFORMANCE (NCR)						
DATE	STEP	Description of NC Section A	Corrective Action Section B			Verification Section C	Approval Chief Eng	Approval QC Inspector
			Initial Chief Eng	Action Description Chief Eng	Sign & Date			

NOTE: Date & initial all entries

H:\fFORMS\Quality Assurance\approved QA\NCRWO RevE

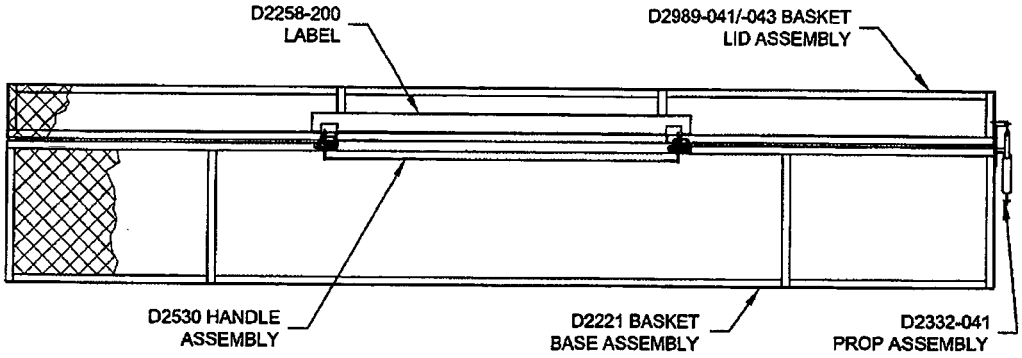

D350-607-043 HELI-UTILITY- BASKET™

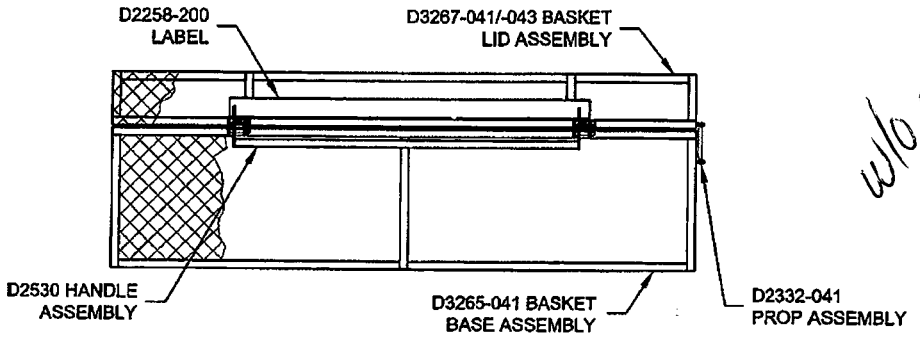

D350-607-047 HELI-UTILITY- BASKET™

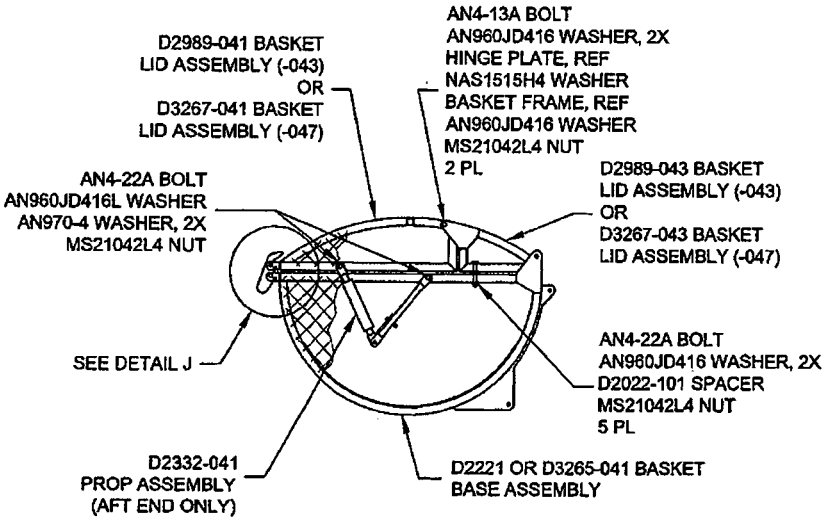

VIEW C-C
PROP ARM DETAIL

Figure 6– Basket Replacement Parts

• COPYRIGHT © 1994 BY DART AEROSPACE LTD •
THIS DOCUMENT IS PRIVATE AND CONFIDENTIAL AND IS SUPPLIED ON THE EXPRESS CONDITION THAT IT IS NOT TO BE USED FOR ANY PURPOSE OR COPIED OR COMMUNICATED TO ANY OTHER PERSON WITHOUT WRITTEN PERMISSION FROM DART AEROSPACE LTD.

Dart Aerospace Ltd

W/O:		WORK ORDER CHANGES					
DATE	STEP	PROCEDURE CHANGE	By	Date	Qty	Approval Chief Eng / Prod Mgr	Approval QC Inspector

Part No: _____ **PAR #:** _____ **Fault Category:** _____ **NCR:** Yes No **DQA:** _____ **Date:** _____

Resolution: _____ **Disposition:** _____ **QA: N/C Closed:** _____ **Date:** _____

NCR:		WORK ORDER NON-CONFORMANCE (NCR)						
DATE	STEP	Description of NC Section A	Corrective Action Section B			Verification Section C	Approval Chief Eng	Approval QC Inspector
			Initial Chief Eng	Action Description Chief Eng	Sign & Date			

NOTE: Date & initial all entries

H:\fFORMS\Quality Assurance\approved QA\NCRWO RevE

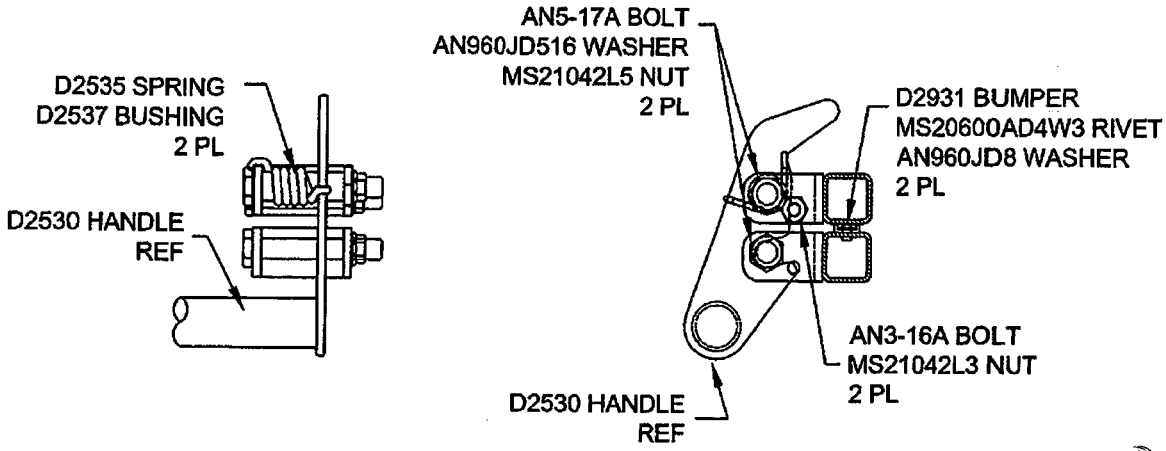

SPRING DETAIL

LATCH DETAIL

DETAIL J:
HANDLE WELDMENT

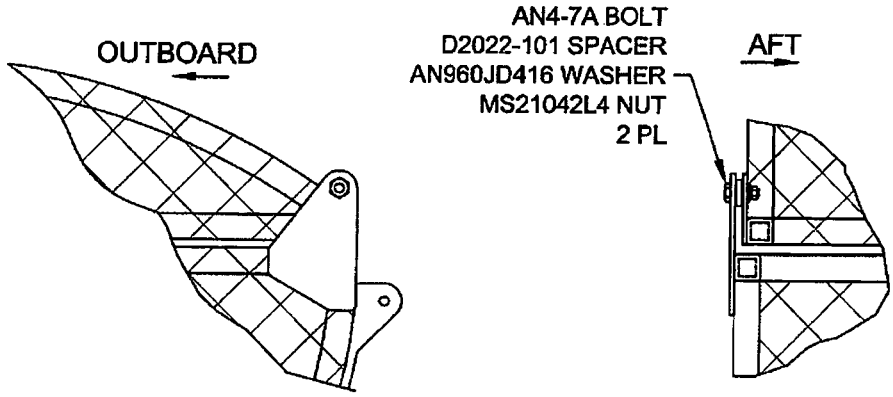

HINGE DETAIL
END VIEW, LOOKING AFT
OTHER END OPPOSITE

HINGE DETAIL
SIDE VIEW, LOOKING OUTBOARD.
OTHER END OPPOSITE

DETAIL H:
HINGE

Figure 7 – Basket Replacement Parts

• COPYRIGHT © 1994 BY DART AEROSPACE LTD •
THIS DOCUMENT IS PRIVATE AND CONFIDENTIAL AND IS SUPPLIED ON THE EXPRESS CONDITION THAT IT IS NOT TO BE USED FOR ANY PURPOSE OR COPIED OR COMMUNICATED TO ANY OTHER PERSON WITHOUT WRITTEN PERMISSION FROM DART AEROSPACE LTD.

Dart Aerospace Ltd

W/O:		WORK ORDER CHANGES					
DATE	STEP	PROCEDURE CHANGE	By	Date	Qty	Approval Chief Eng / Prod Mgr	Approval QC Inspector

Part No: _____ PAR #: _____ Fault Category: _____ NCR: Yes No DQA: _____ Date: _____

Resolution: _____ Disposition: _____ QA: N/C Closed: _____ Date: _____

NCR:		WORK ORDER NON-CONFORMANCE (NCR)						
DATE	STEP	Description of NC Section A	Corrective Action Section B			Verification Section C	Approval Chief Eng	Approval QC Inspector
			Initial Chief Eng	Action Description Chief Eng	Sign & Date			

NOTE: Date & initial all entries

H:\fFORMS\Quality Assurance\approved QA\NCRWO RevE